VAR	MODEL	COLOR	DENSITY
-01	6252S	BROWN	SOFT
-02	6252M	GREEN	MEDIUM
-03	6252T	RED	TOUGH
-04	6252H	BLACK	HARD

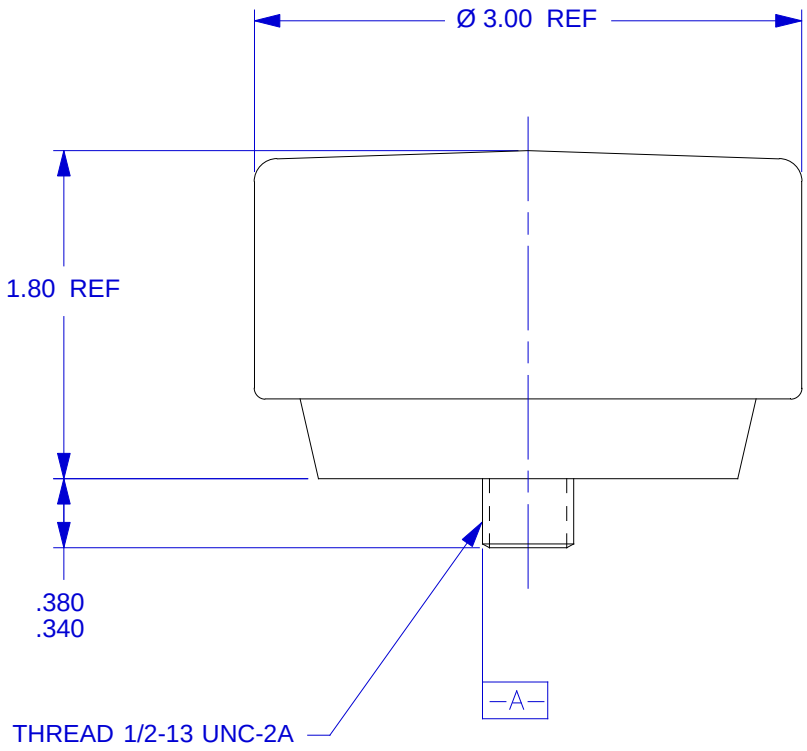

DYTRAN INSTRUMENTS, INC.

CHATSWORTH, CA.

SCALE 1X	REV -	DATE -	ECN -		
DATE 8/1/02	PART NO. SEE CHART				
DRAWN P.N. / CHECKED N.C.	MAT'L SEE CHART				
APPROVED	NEXTASSEMBLY	USEDON 5803A			
TITLE **OUTLINE/ISTALLATION DRAWING, IMPACT TIP, MODEL 5803A**	DWG NO. **127-6252**	SHEET 1 OF 1			