REV	ECN	DESCRIPTION	BY/DATE	CHK	APPR
M	12443	ADDED SCHEMATIC	LA 01/20/16	LW	AS

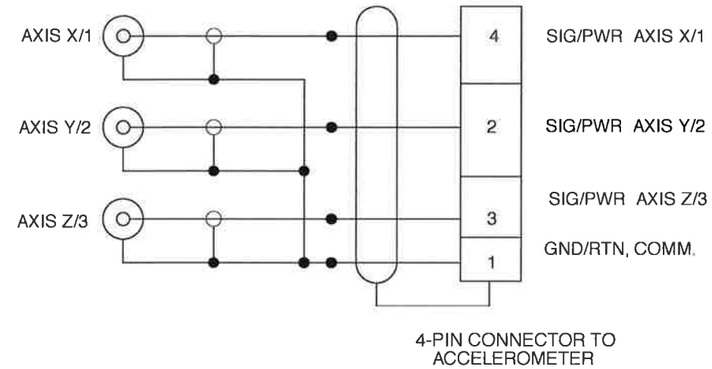

SCHEMATIC

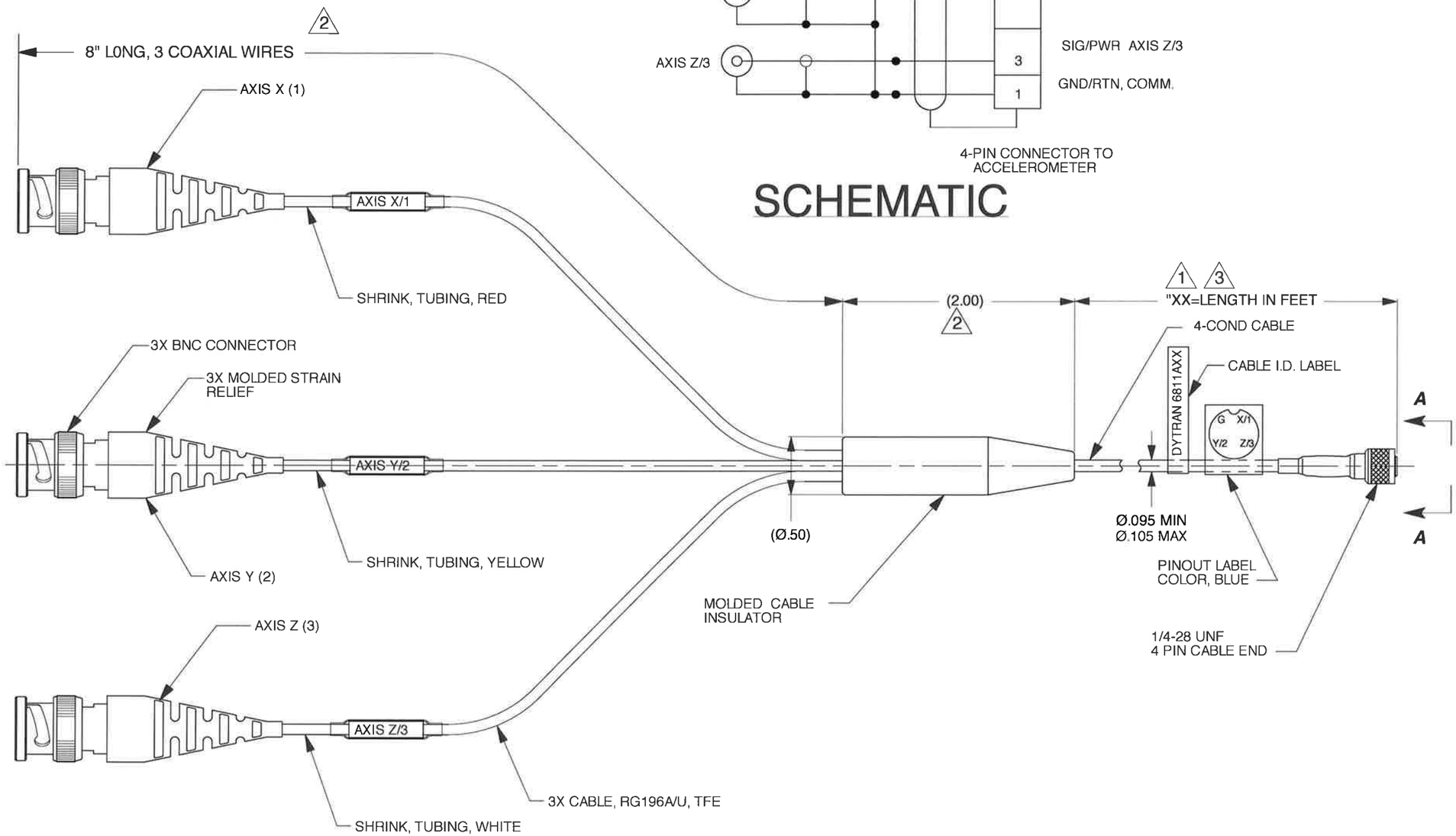

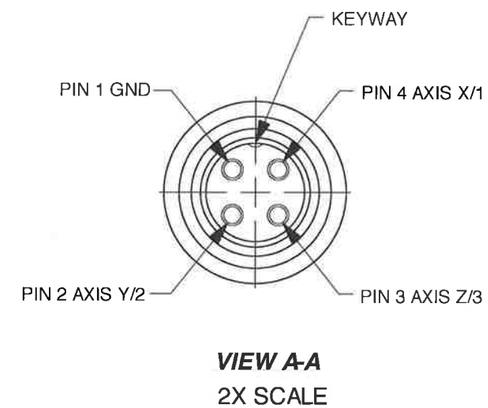

3 OPERATING RANGE: -67°F (-55°C) TO 275°F (135°C)

2 OPERATING RANGE: -67°F (-55°C) TO 230°F (110°C)

1 XX=WILL VARY IN FEET PER CUSTOMER REQUIREMENTS, FOR EXAMPLE: 6811A07 = 7 FT CABLE LENGTH

EXCEPT AS OTHERWISE NOTED

ALL DIMENSIONS IN INCHES
TOLERANCE: .XXX = ± .XX= ± .25

SURFACE FINISH EXCEPT AS NOTED √

BREAK EDGES TO DEBURR RADIUS OR CHAMFER

THESE DIAS ⊙ TO T.I.R.

FILLETS - MAX RAD.

DYTRAN INSTRUMENTS, INC. CHATSWORTH, CA.

MASTER
ONLY IF IN RED

SCALE 1X	REV -	DATE SEE REV BLK	ECN -		
DATE 5/21/02	PART NO. MODEL 6811AXX				
DRAWN R.A. / CHECKED N.C.	MAT'L -				
APPROVED CES 12/20/06	NEXT ASSEMBLY -		USED ON -		
TITLE **OUTLINE/INSTALLATION DRAWING, CABLE ASSEMBLY, MINI 4 PIN, PLUG TO (3) BNC**			DWG NO. **127-6811A**		
			SHEET 1 OF 1		